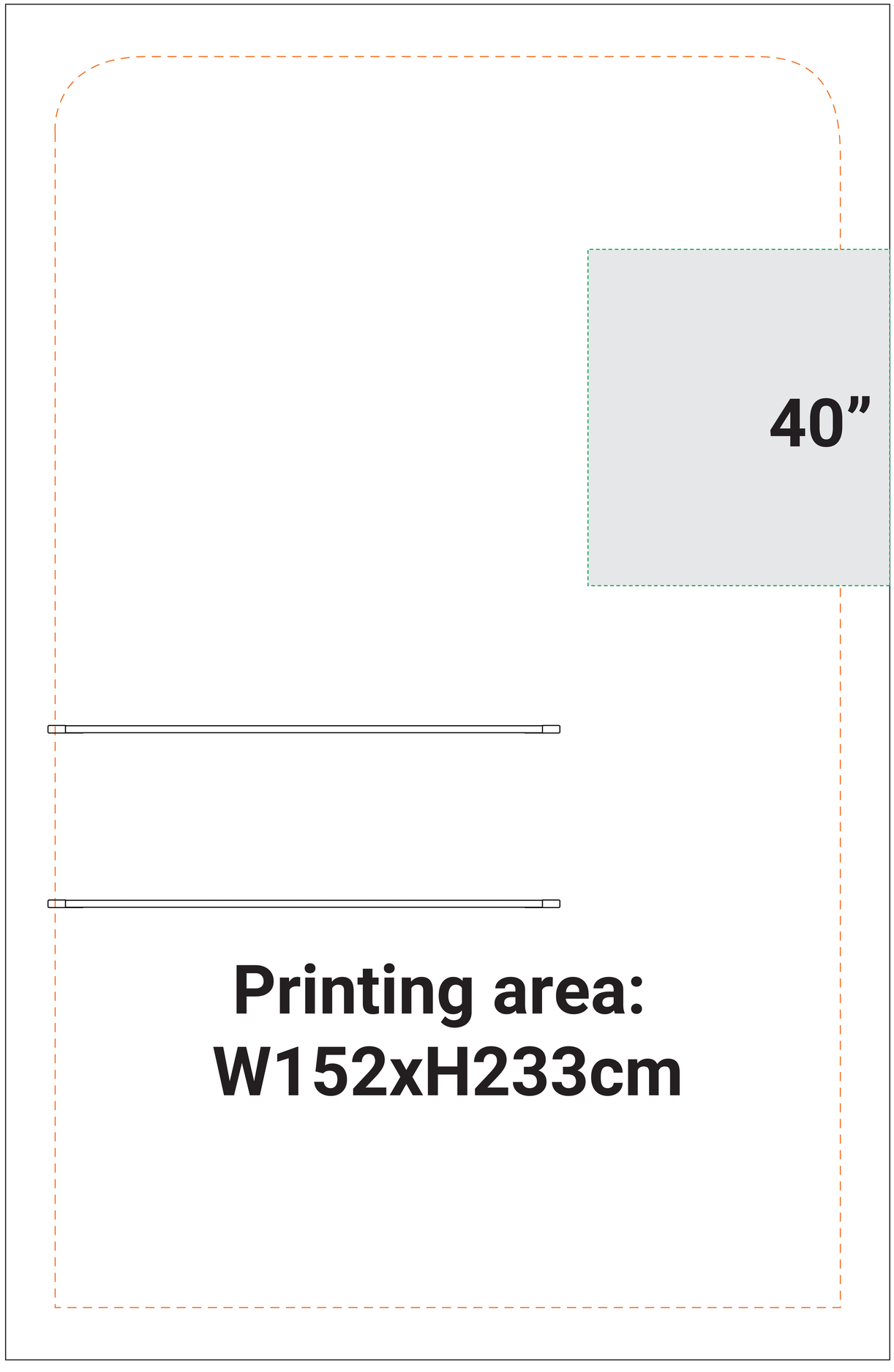

ES-10ft Booth B

Printing area: W152xH258cm

1. **CMYK color model**
2. **Resolutions must be 120dpi**
3. **Flatten all design elements and save the final file as TIFF or JPG**

Safe visible area

Be aware of Safe visible area & keep important images & text inside this line.
(Anything left outside the orange box may be cut off during trimming.)

Printing area

Make sure to extend the background images or colors all the way to the edge of the black outline.